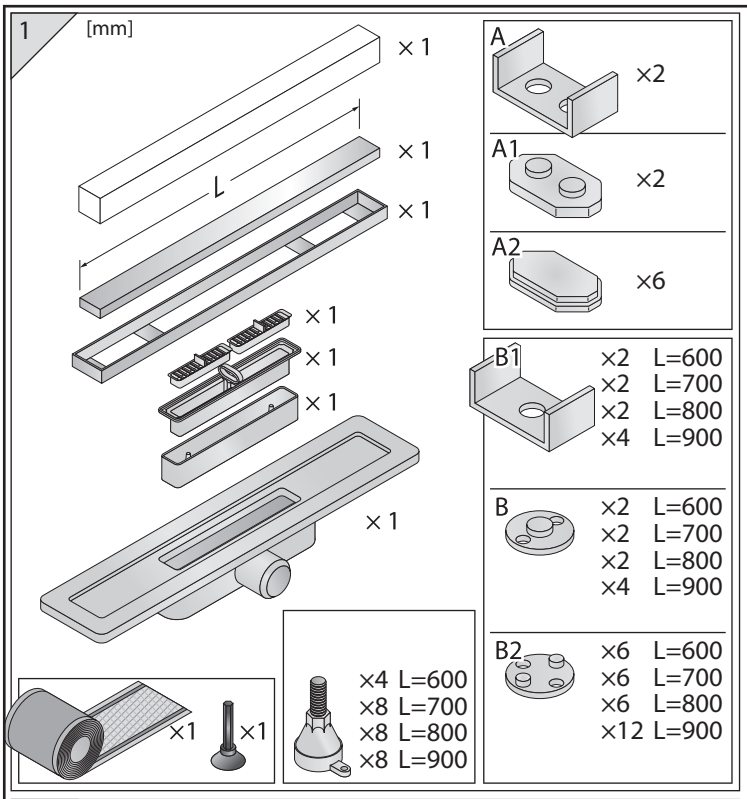

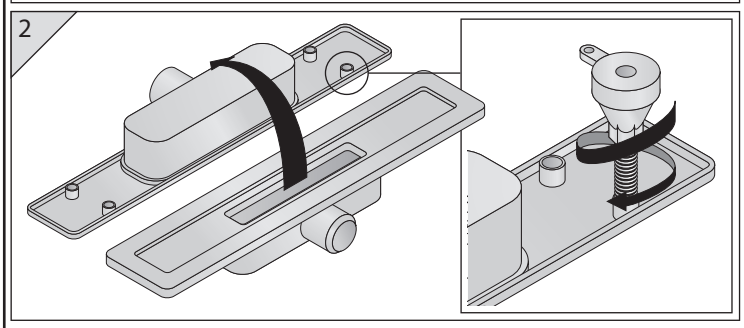

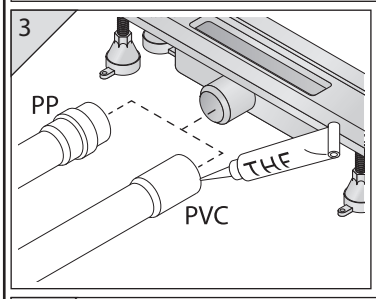

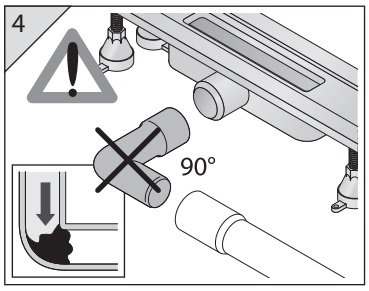

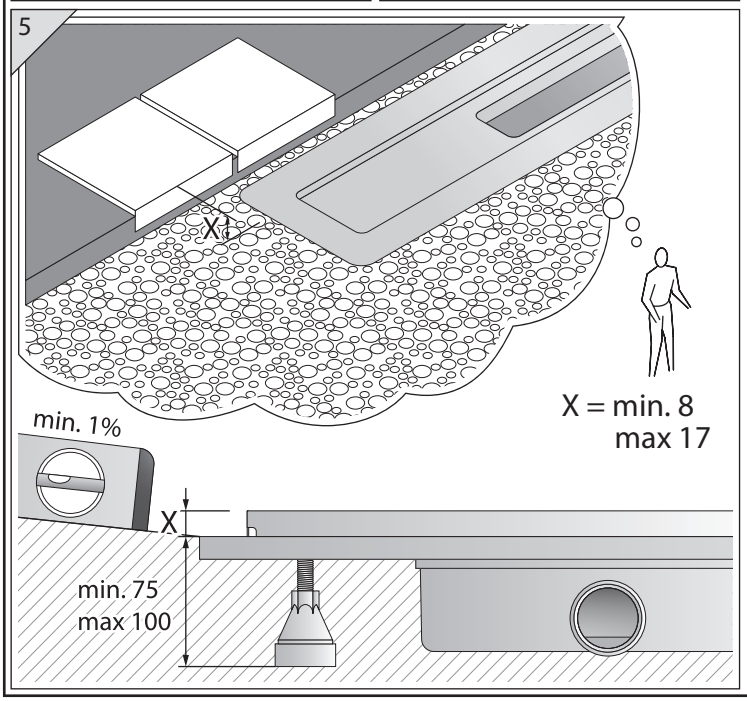

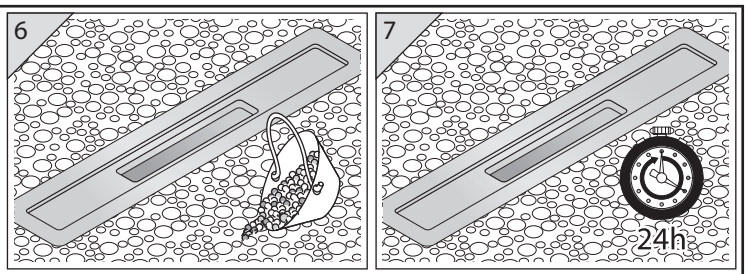

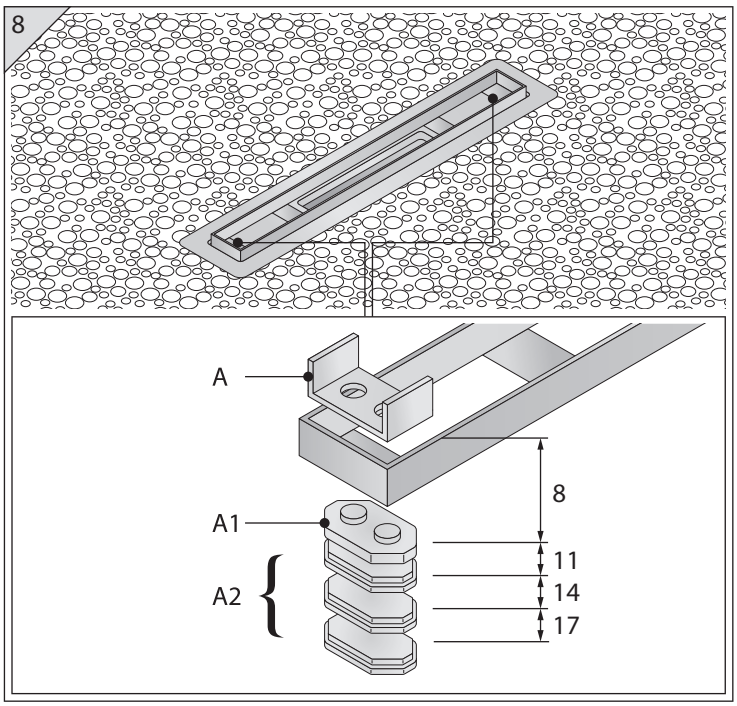

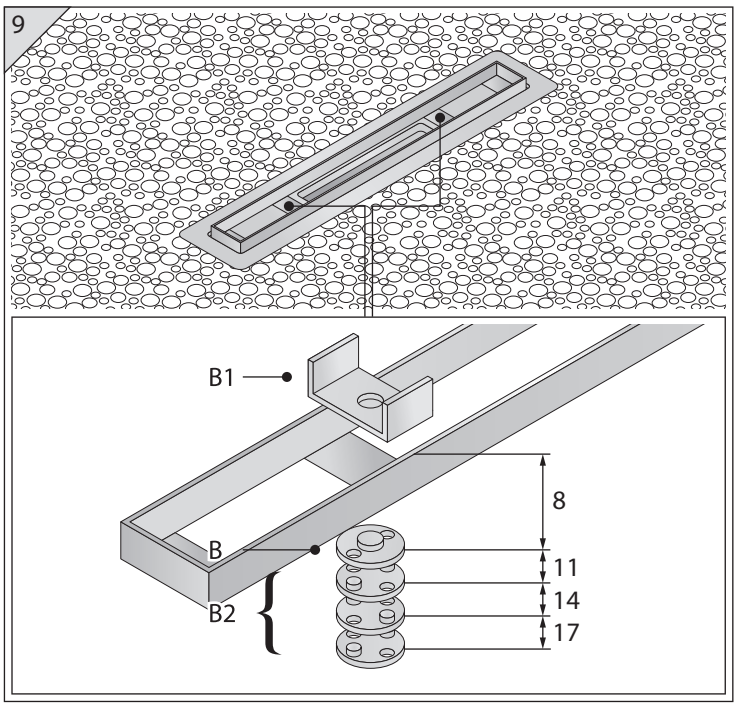

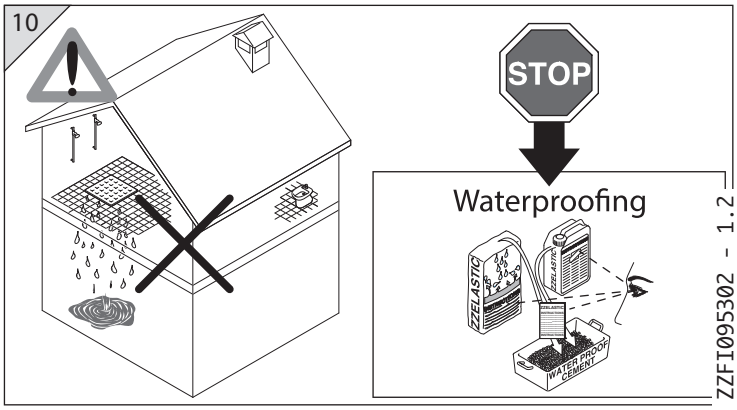

ZZFI095302 - 1.2

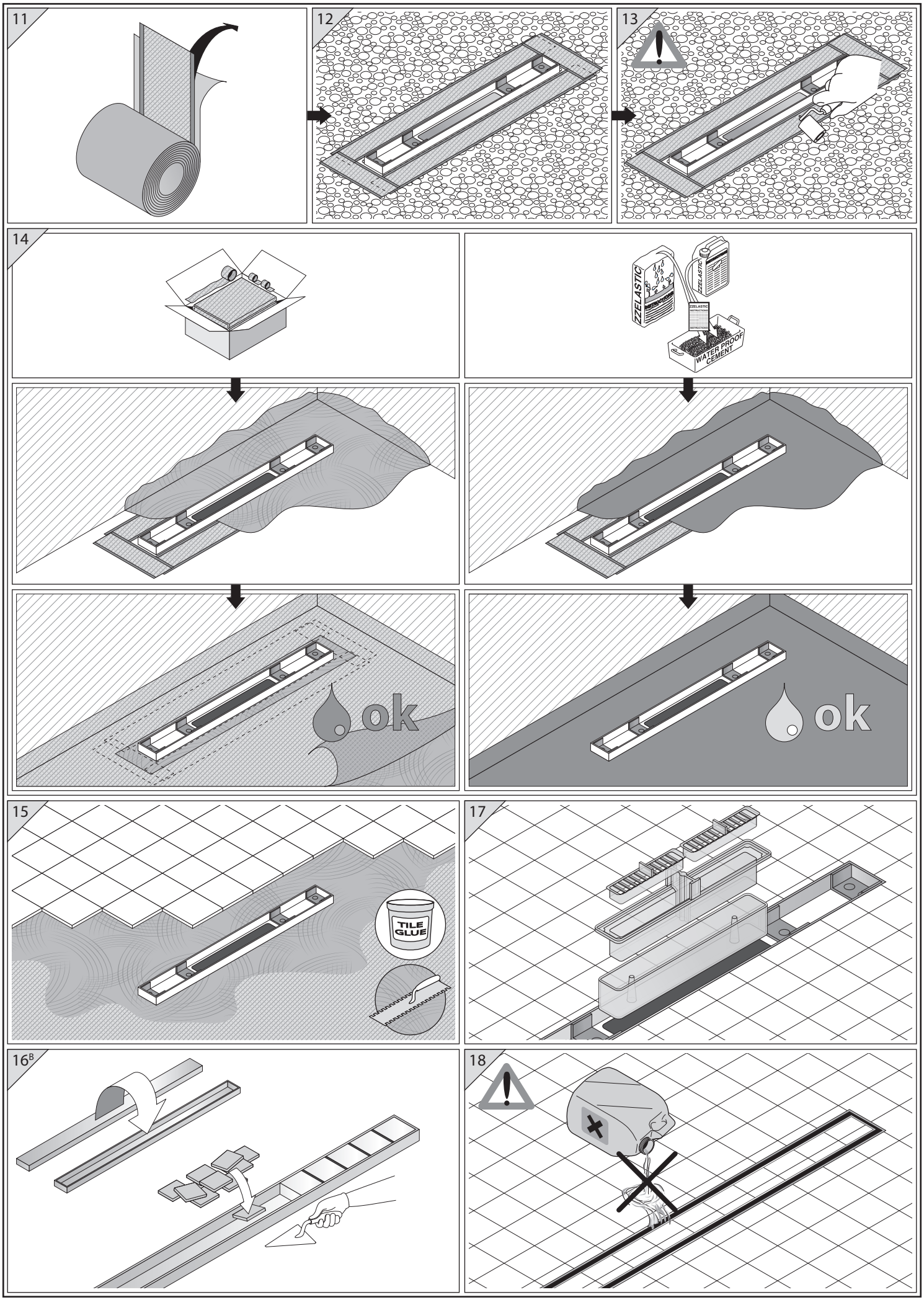
11
12
13
14
ZZELASTIC
WATER PROOF CEMENT
ok
ok
15
TILE GLUE
17
16B
18