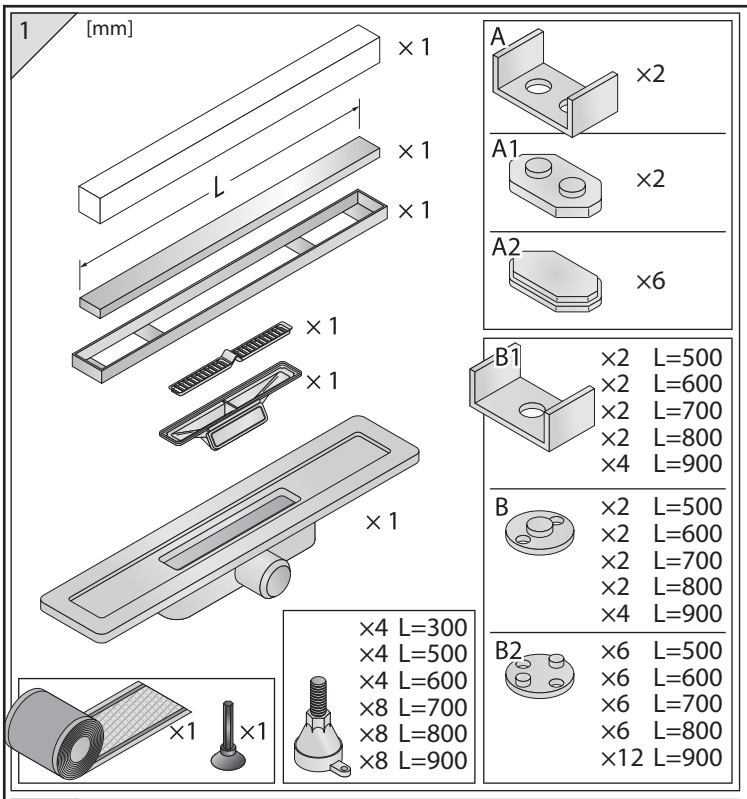

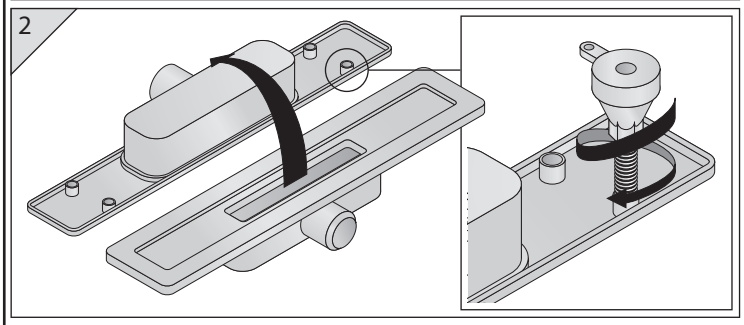

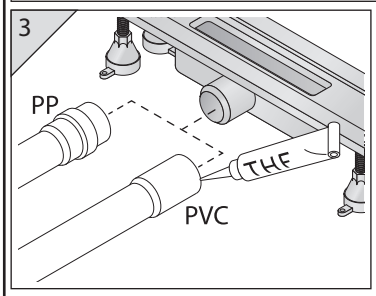

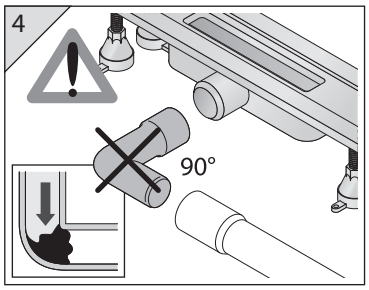

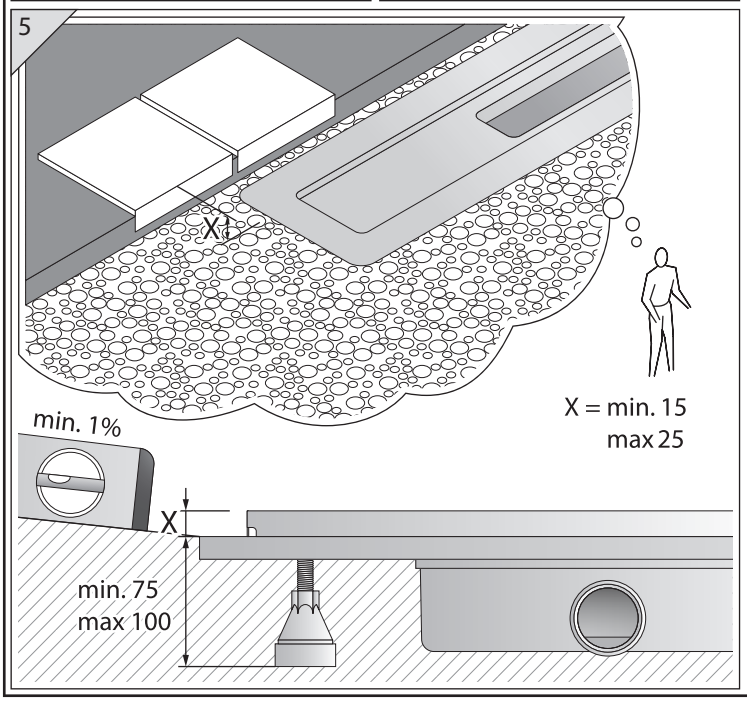

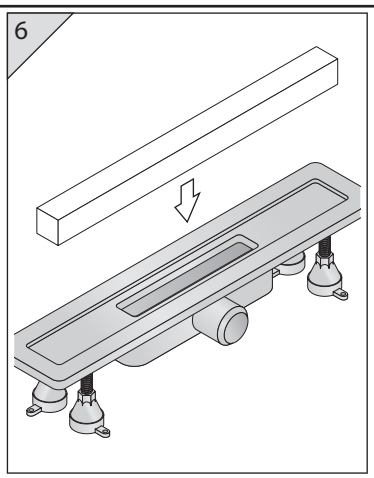

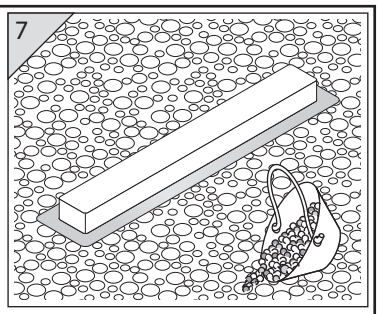

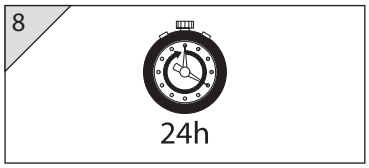

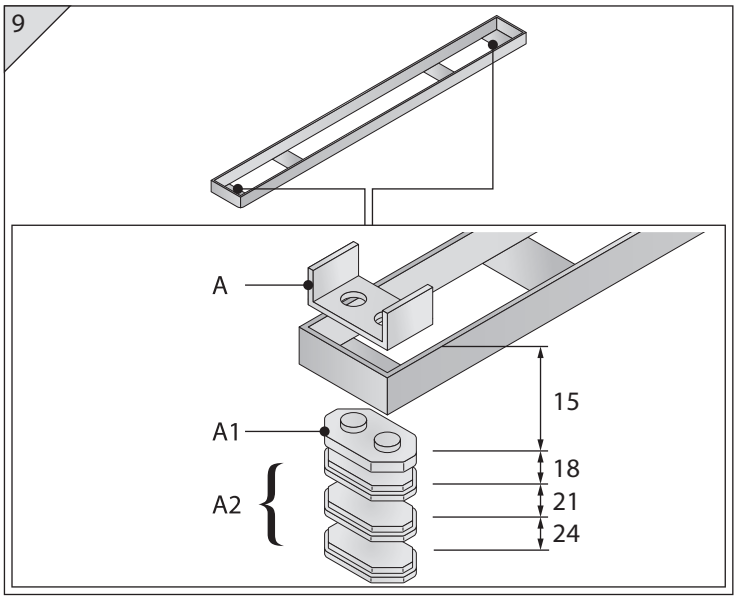

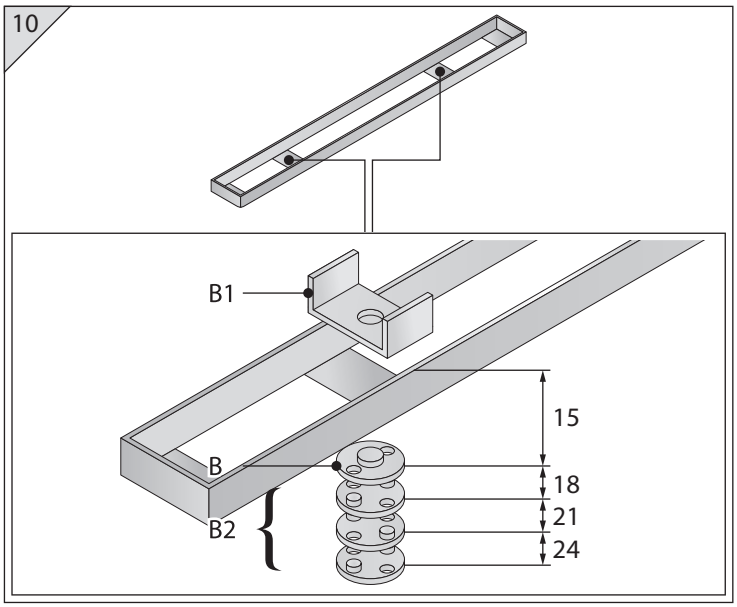

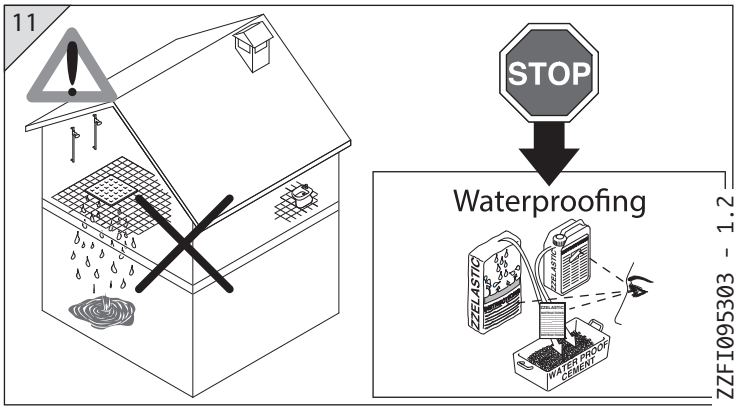

ZZFI095303 - 1.2

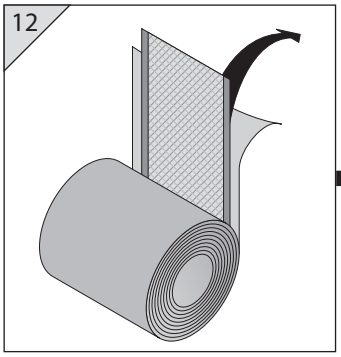
12

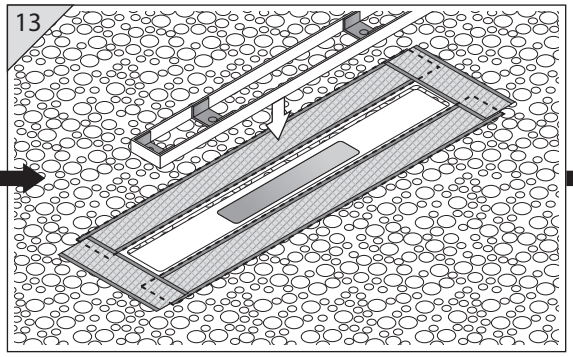
13

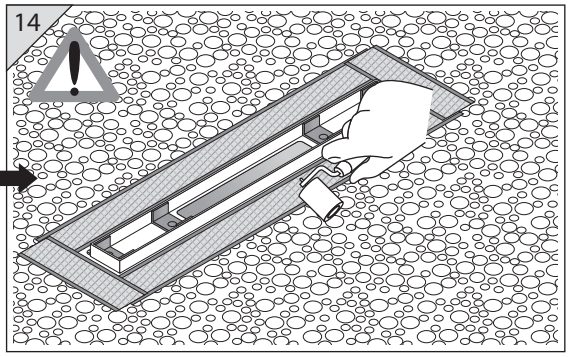
14

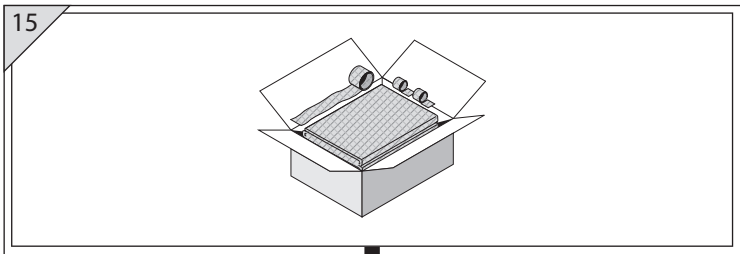
15

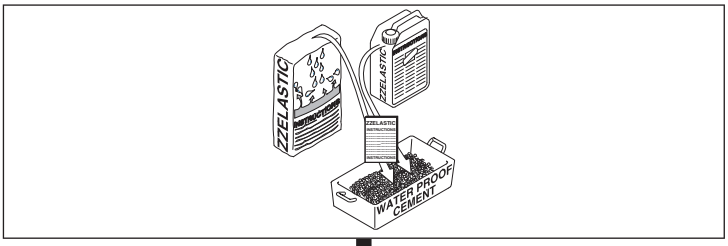
ZZELASTIC
ZZELASTIC
ZZELASTIC
WATER PROOF CEMENT

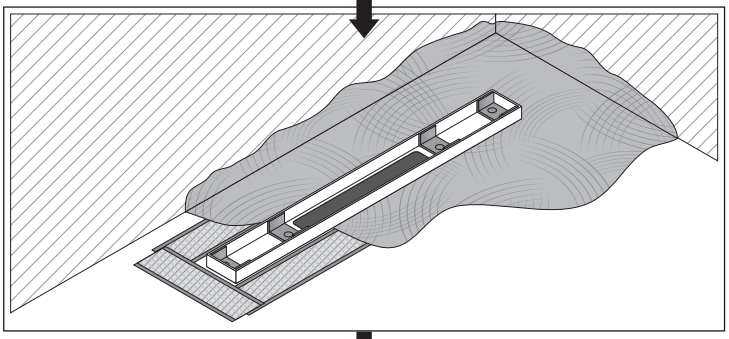

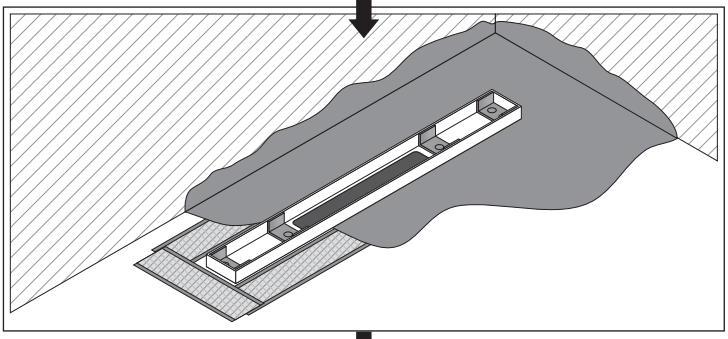

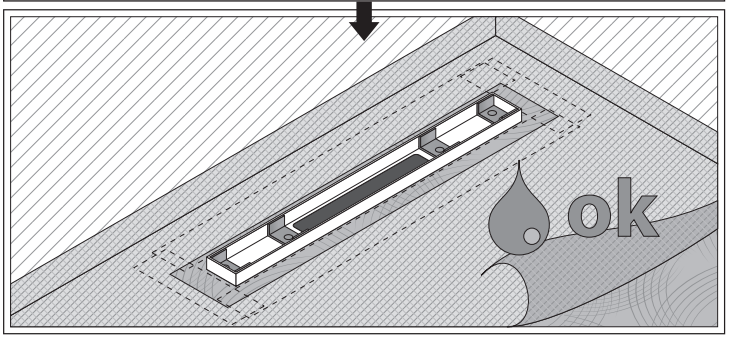
ok

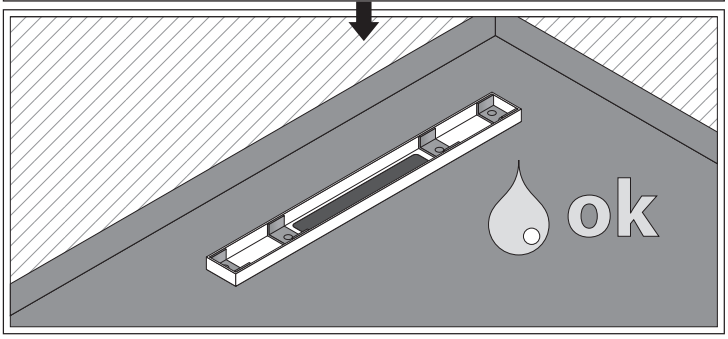
ok

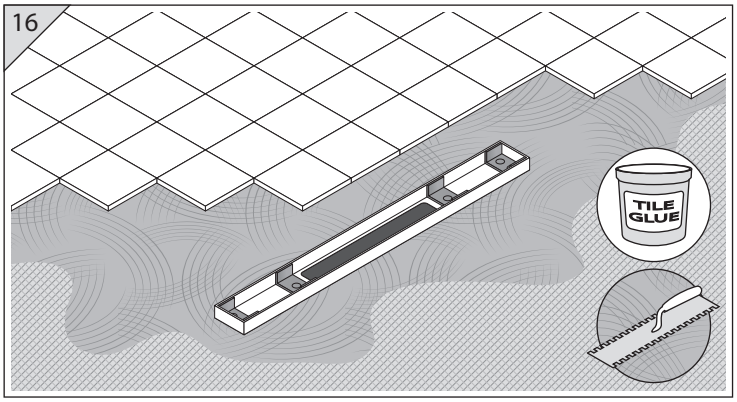
16
TILE GLUE

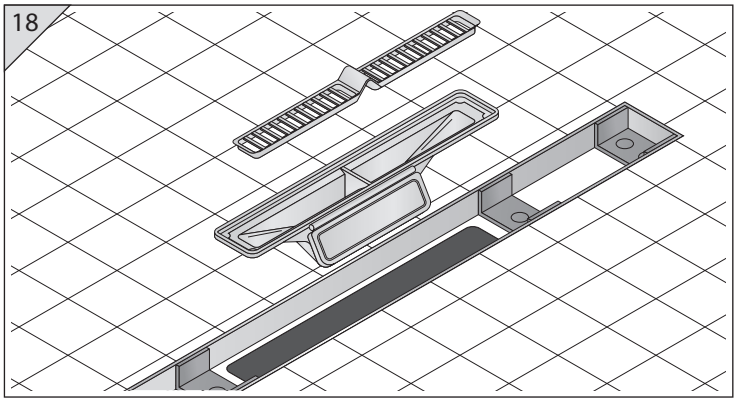
18

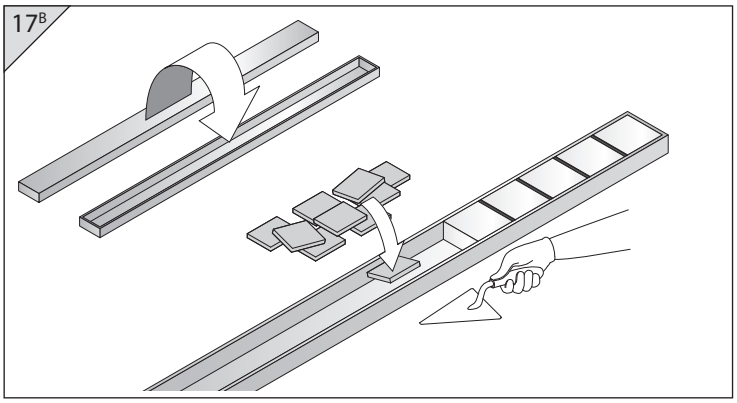
17B

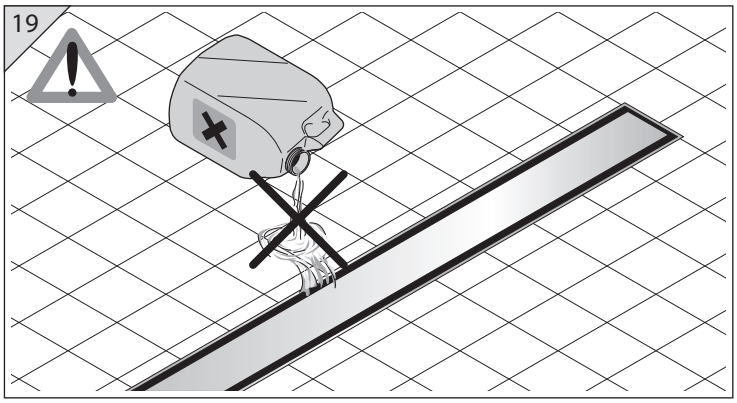
19