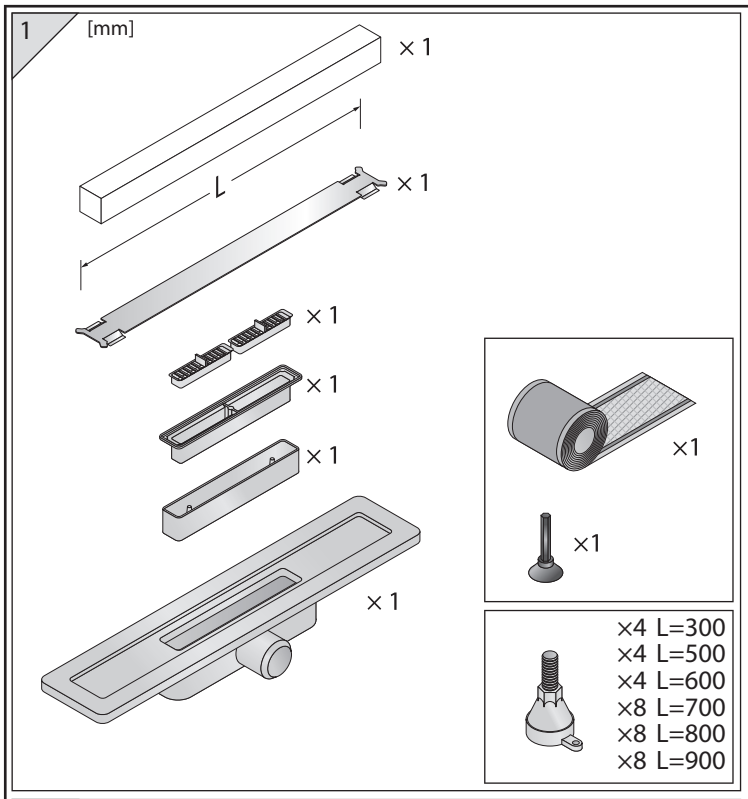

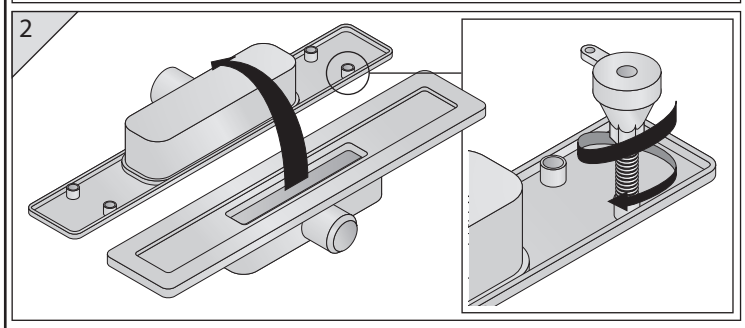

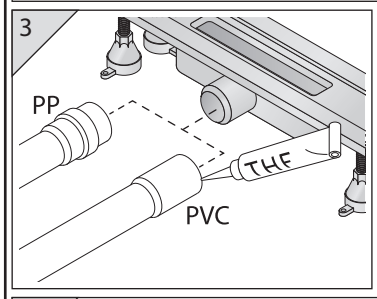

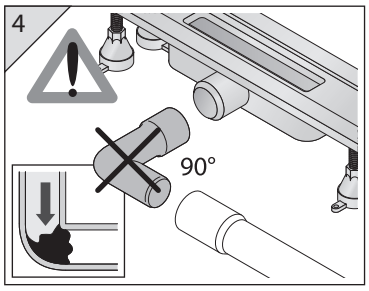

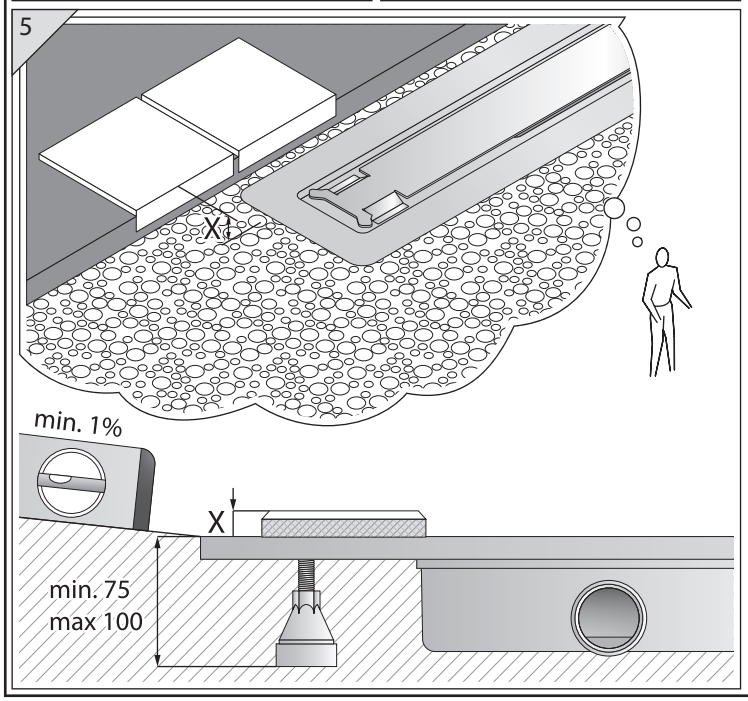

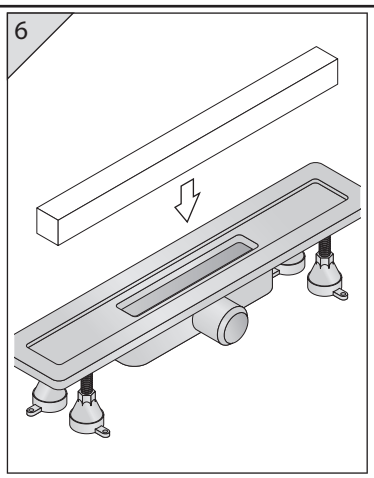

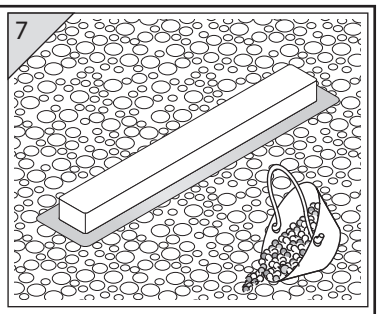

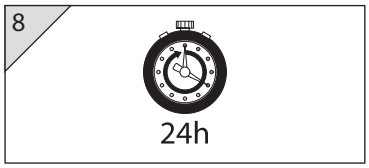

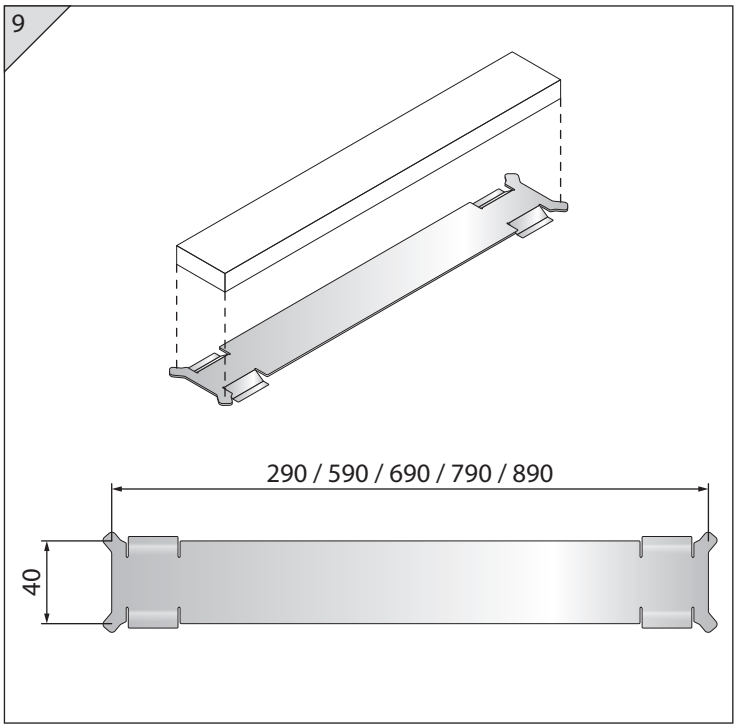

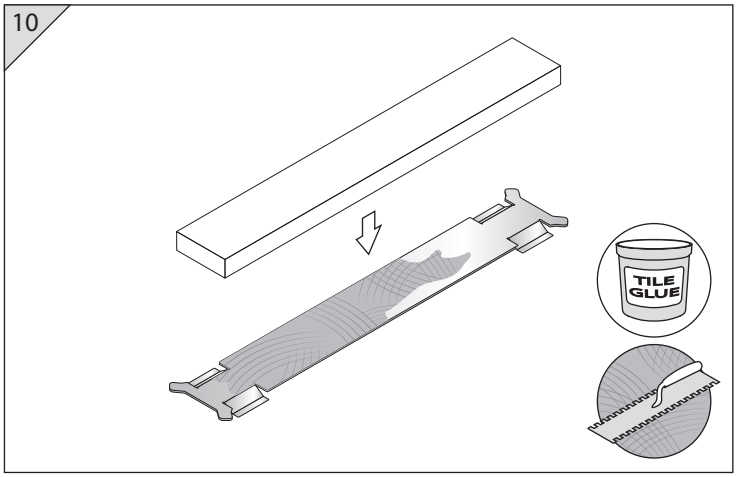

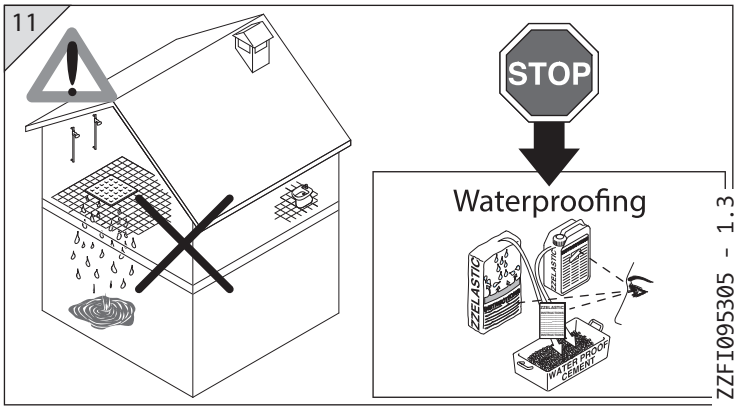

ZZFI095305 - 1.3

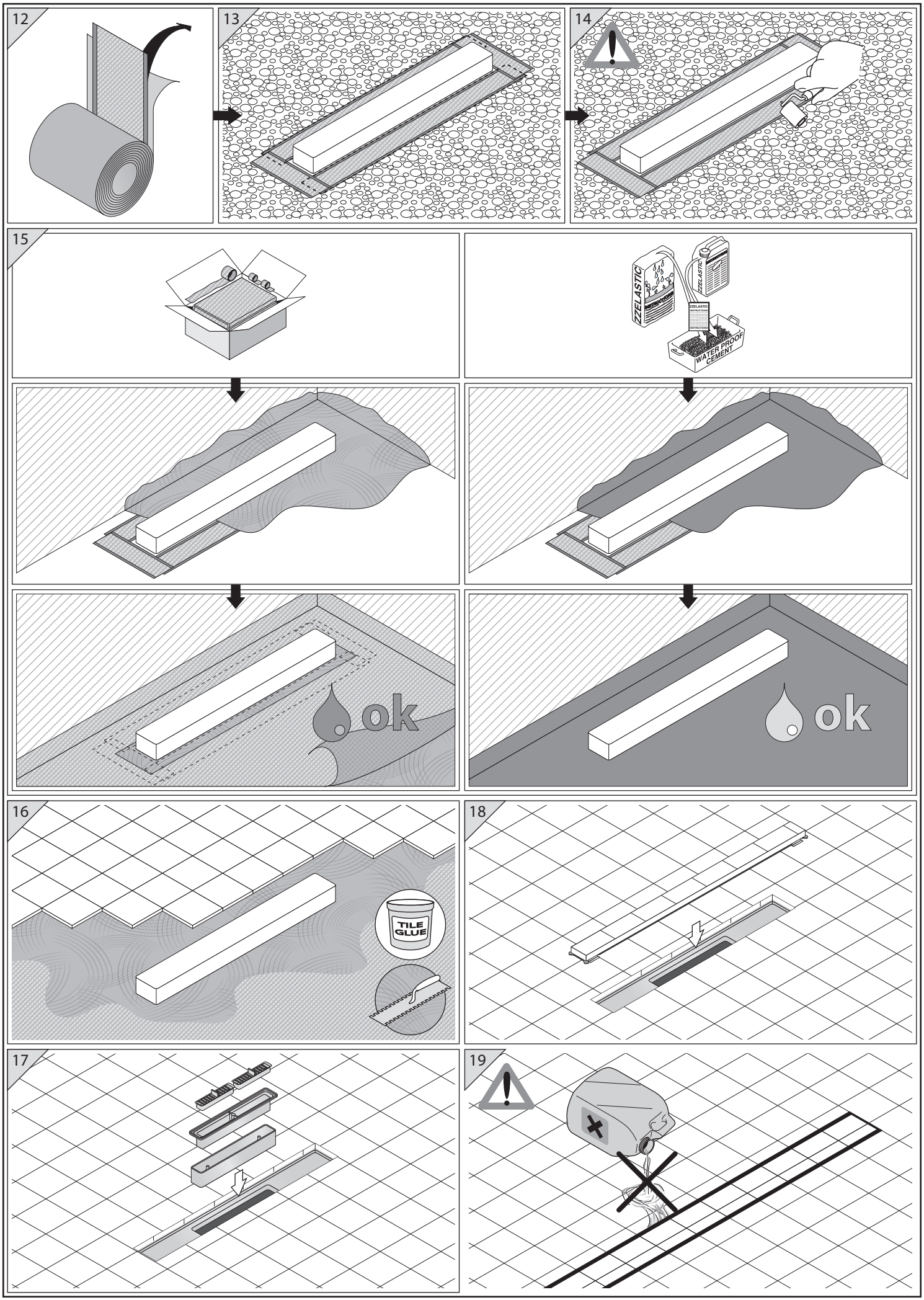
12
13
14
15
ZZELASTIC
WATER PROOF CEMENT
ok
ok
16
TILE GLUE
18
17
19