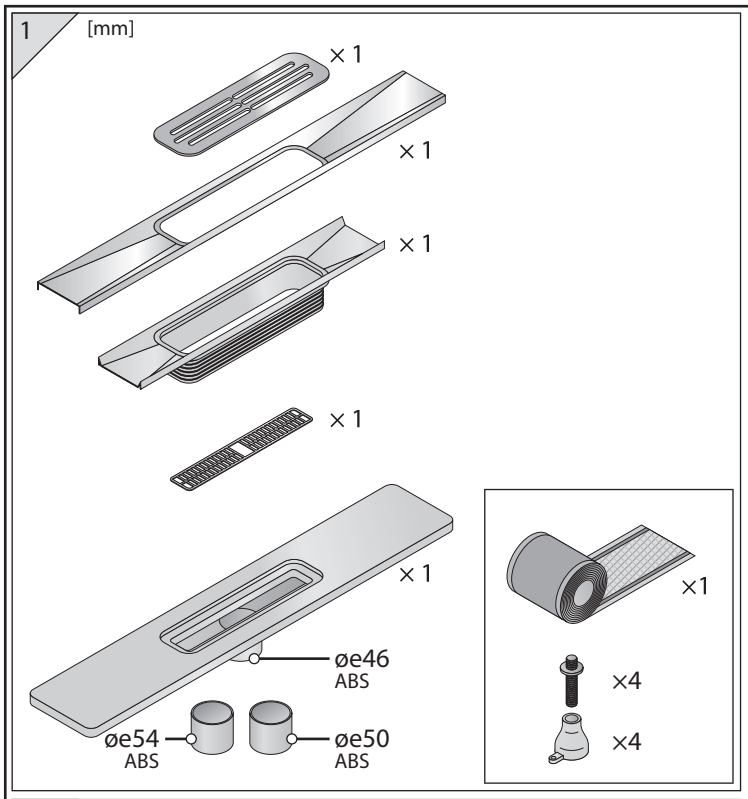


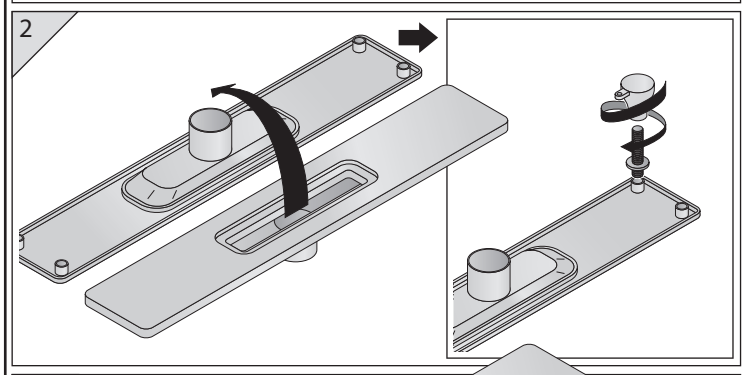


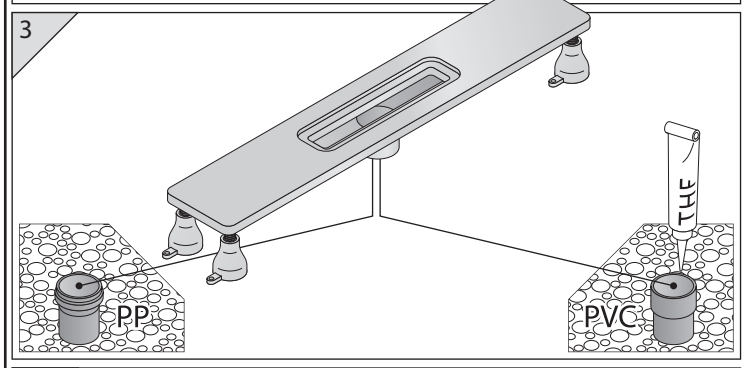


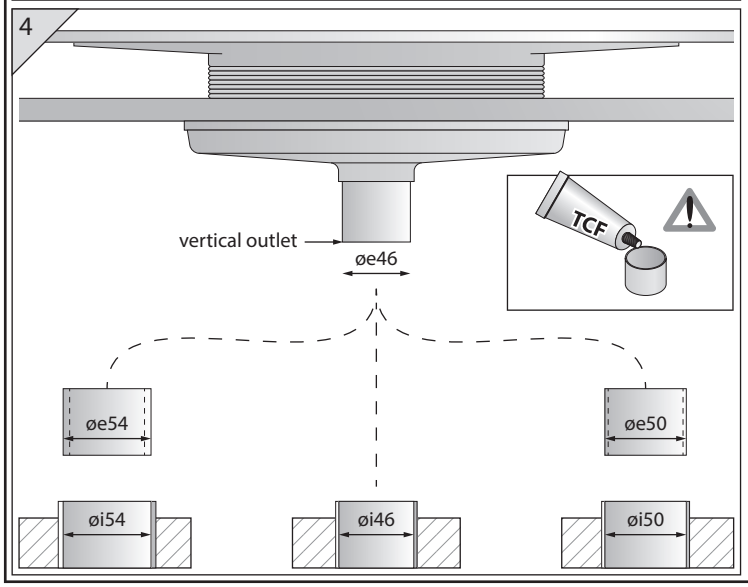


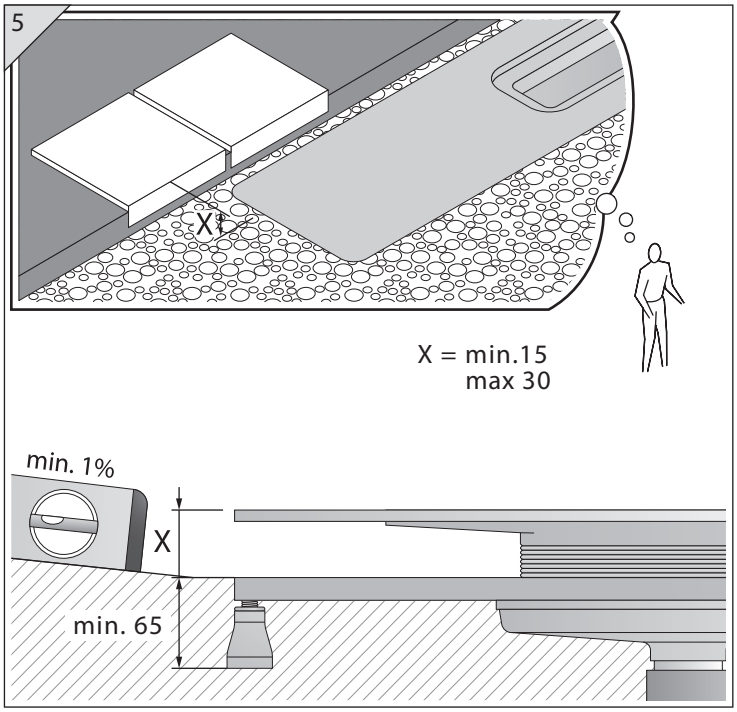


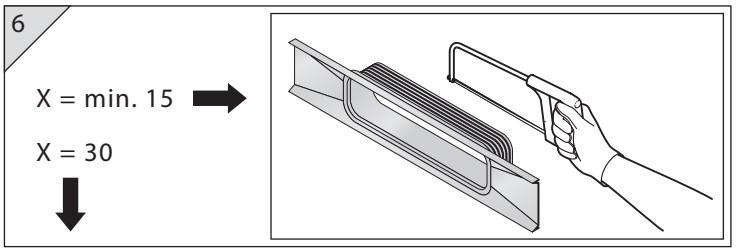


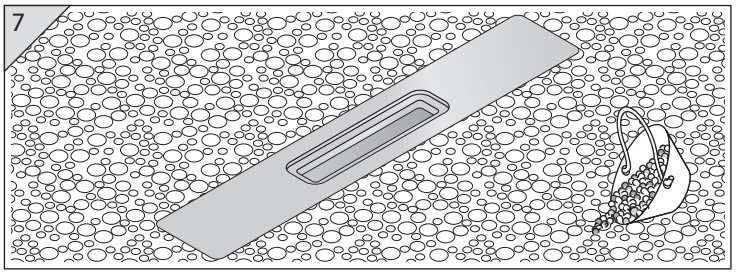


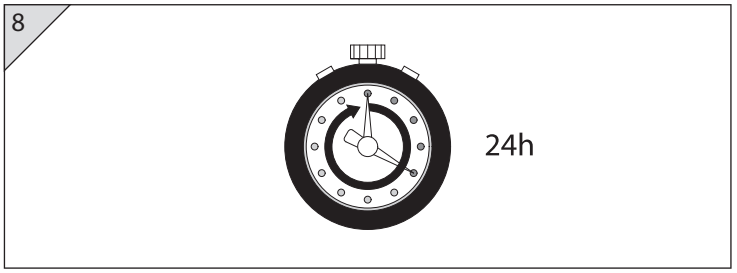


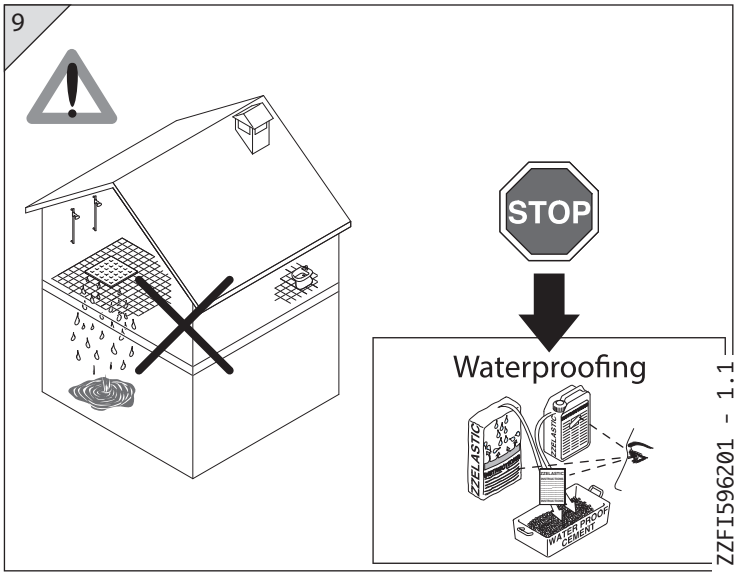


ZZFI596201 - 1.1

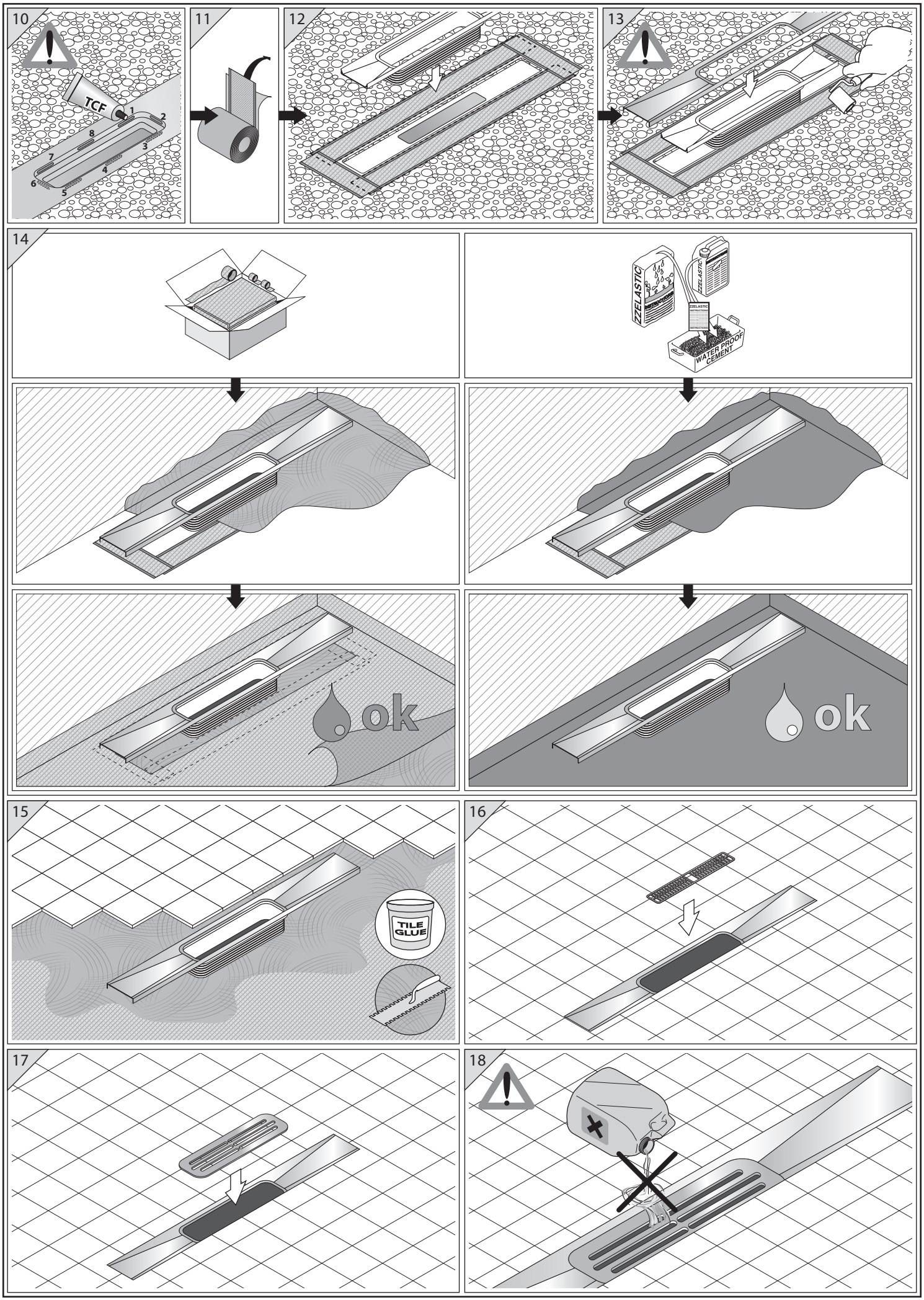
10
TCF
1
2
3
4
5
6
7
8
11
12
13
14
ZZELASTIC
WATER PROOF CEMENT
ok
ok
15
TILE GLUE
16
17
18